Free Single Bubble Ultrasonic Detection : Chirp Frequency Excitations Applied to Nonlinear Mixing Method

Thomas Goursolle[1*], Basile Pottier[1], Damien Fouan[1,2] and Serge Mensah[2]

[1] *BF Systèmes – Technopôle de la Mer, 229 Chemin de la Farlède* – LA SEYNE SUR MER (F-83500)

[2] *National Center of Scientific Research* (C.N.R.S.) – *Laboratory of Mechanics & Acoustics* (L.M.A.) – MARSEILLE (F-13000)

*e-m@il : thomas.goursolle@bf-systemes.fr

– Background of Scientific Research –

This study aims at designing advanced bubble detection and sizing techniques for decompression sickness prevention.
Circulating bubbles with diameter comprised between [20 – 200 μm] are measured in precordial area. In that purpose, dedicated ultrasound techniques are designed; they exploit the very specific nonlinear behavior of free bubbles in a sound field in a viscous fluid.

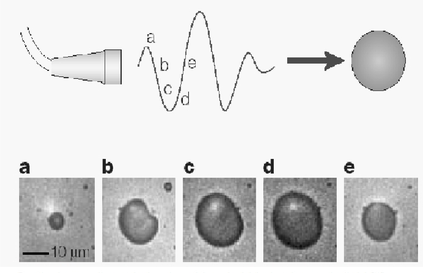

Particular nonlinear behavior of free bubble in ultrasonic field [1]

This behavior is discribed by the Rayleigh-Plesset equation [1]

$$\rho_L\left(R\ddot{R}+\frac{3}{2}\dot{R}^2\right)=P_0\left(\frac{R_0}{R}\right)^{3\zeta}-P_0-P(t).$$

with a characteristic solution defining the bubble resonance frequency [2]

$$f_M=\frac{1}{2\pi R_0}\sqrt{\frac{3\gamma P_0}{\rho_L}}$$

R_0 bubble radius, P_0 static pressure in the liquid, ρ_L volumetric mass density of the liquid, σ surface tension and γ calorific capacity ratio.

– Dual Frequency Method –

In order to reveal the nonlinearity induced by the bubble dynamics, a low frequency chirp excitation that embraces the resonant frequency of the bubble is applied in conjunction with a nonlinear mixing method [3].

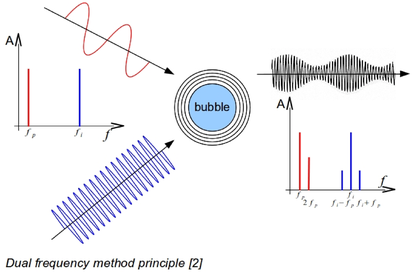

Dual frequency method principle [2]

When the bubble is excited near to its resonance by the "pump" wave (f_p), the medium is explored with a "probe" wave (f_i).
This wave diffused by the bubble whose the active surface varies in function of the "pump" wave frequency will be subjected to a proportional amplitude modulation [3].
Presence and size informations of bubbles are given by detecting modulation frequencies occurence ($f_+ = f_i + f_p$ and $f_- = f_i - f_p$) and by measuring the modulating "pump" wave frequency.
In order to apply this method to a bubble distribution with different sizes, a chirp frequency pump wave is used $x(t)=\sin(2\pi\omega(t)t)$ with $\omega(t)=\frac{\omega_{end}-\omega_{beg}}{2}t+\omega_{beg}$.

- Experimental Setup –

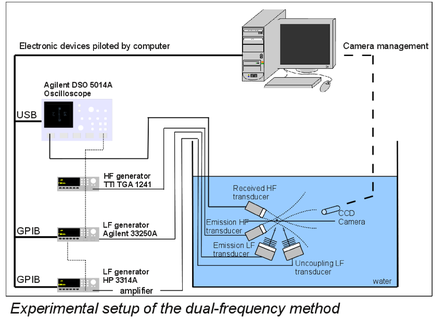

Experimental setup of the dual-frequency method

– **"Probe" wave:** f_i = 1 MHz, A_i = 10 V_{pp}, tone-burst length 100 ms, IMASONIC transducer f_c = 1 MHz

– **Excited LF wave:** chirp signal f_{beg} = 20 kHz, f_{end} = 80 kHz, length 10 ms, A_p = 10 V_{pp}, ULTRAN-GMP transducer f_c = 50 kHz

– **Uncoupling LF wave:** f_d near to the bubble resonance frequency, A_d = 200 mV_{pp}, amplifier AR75A250

Principle : Firstly, the bubble is taken off by the uncoupling LF wave. Secondly it is excited by the LF chirp signal and the HF wave is sent to probe the medium.
When the bubble is excited by a LF wave, the spectral signature dependent on the bubble size is obtained.

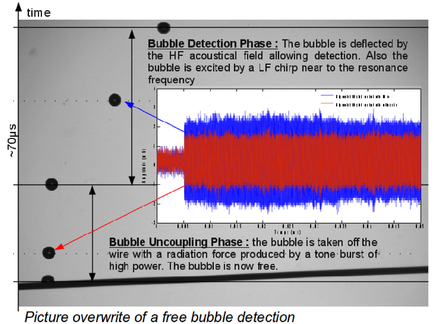

Picture overwrite of a free bubble detection

– Detection Results –

Since the amplitude laws of scattered waves characterize the resonance phenomenon, they are extracted in the time-frequency plane before being averaged over ten realizations (chirp signals scattered by the bubble).

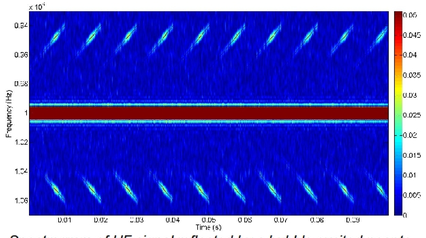

Spectrogram of HF signal reflected by a bubble excited near to its resonance

The quality of the estimation is assessed by using the Q-factor $Q=f_r/\Delta f$.

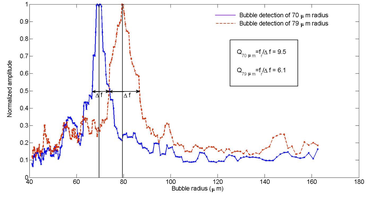

The bubble can be detected and sized with a 5% error margin comparable to the camera frame.

– Prospects for Diving Applications –

In order to apply this method directly on divers, different prospects are envisaged by BF Systèmes company for its development

– Research and development of an Acoustical Doppler System with a detection algorithm is in progress and several measurement campaigns have been done in order to demonstrate the robustness of our choices.
– Development in the same electronic architecture of the system presented is considered. Different new techniques of low frequency generation to excite bubble near to its resonance have been envisaged.

– Conclusions –

To conclude, this method allows to detect free single microbubble with a dual frequency ultrasound experiment. By transmitting a low chirp frequency near to the bubble resonance, interaction components are detected when bubble with a radius accorded with the low frequency is present. In prospect, a realization of an histogram on bubble population for each system of generation can be considered. A measurement of acoustical pressures near to the bubble can be necessary.

This project has been carried out by BF Systèmes company in partnership with CNRS (National Center of Scientific Research) under the sponsorship of French MoD (DGA / Program R.A.P.I.D).

– References –

1. **Plesset M.S.**, *The dynamics of cavitation bubbles*, Journal of Applied Mechanics, vol.16, p. 277-282, 1949.
2. **Smith F.D.**, *On the destructive mechanical effects of the gas-bubbles liberated by the passage of intense sound through a liquid*, Philosophical Magazine, vol.19, p. 1147-1151, 1935.
3. **Newhouse V.L.** ***et al.***, *Bubble size measurements using the nonlinear mixing of two frequencies*, The Journal of Acoustical Society of America, vol. **75**(4), p. 1473-1477, 1984.
4. **Briggs H.B.** ***et al.***, *Properties of liquids at high sound pressure*, The Journal of Acoustical Society of America, vol. **19**(4), p. 664-677, 1947.